R-KER-II Hybrid resin with Threaded Rods

High strength and versatile application in cracked and non-cracked concrete with threaded rods.

Approvals and Reports

- ETA-21/0242
- UKTA-22/6130

Product information

Features and benefits

- Approved for use in cracked and non-cracked concrete (EAD 330499-01-0601), working life up to 100 years
- Suitable for use in dry or wet substrates and water filled holes
- For faster curing winter version of the resin can be used
- No need for hole cleaning when using Dustlessdrill bit
- Special nozzle with longer mixer for more comfortable and precise application
- Suitable for multiple use. Partly used product can be reused after fitting new nozzle
- Very high load capacity
- Tests in fire conditions confirm the fire resistance up to R120

Applications

- Curtain walling
- Balustrading
- Handrails
- Canopies
- Cable conduits and trays
- Fencing & gates manufacturing and installation
- Pipework/ductwork supports
- Platforms
- Pipelines systems
- Passenger lifts
- Safety barriers
- Formwork support systems
- Structural steelwork
- Street lamps
- Racking systems
- Barriers

Base materials

Approved for use in:

- Cracked concrete C20/25-C50/60
- Non-cracked concrete C20/25-C50/60

Installation guide

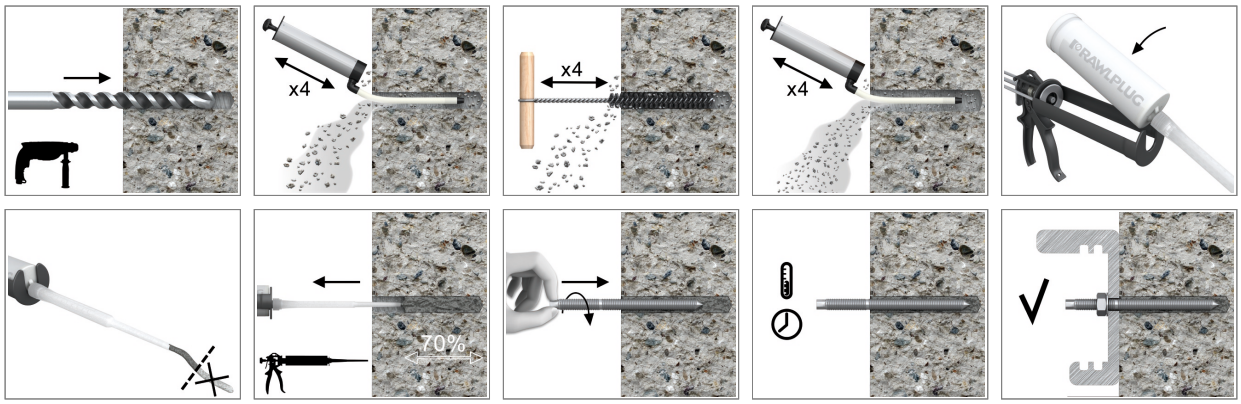

Product information

1. Drill hole to the required diameter and depth for stud size being used.
2. Clean the hole thoroughly with brush and hand pump at least four times before installation.
3. Insert cartridge into gun and attach nozzle.
4. Dispense to waste until even colour is obtained (min. 10 cm).
5. Insert the mixer nozzle to the bottom of the drill hole and inject resin, slowly withdrawing the nozzle as the hole is filled to 70% of its depth.
6. Immediately insert the stud, slowly and with slight twisting motion. Remove any excess resin around the hole before it sets and leave it undisturbed until the curing time elapses.
7. Attach fixture and tighten the nut to the required torque.

Product Code	Resin	Description / Resin Type	Volume [ml]
R-KER-II-300	R-KER-II	R-KER II Hybrid Resin	300
R-KER-II-345			345
R-KER-II-400			400
R-KER-II-300-S	R-KER-II-S	R-KER II Hybrid Resin for High Temperature (Summer) / Slow Cure Styrene Free Hybrid Resin	300
R-KER-II-400-S			400
R-KER-II-300-W	R-KER-II-W	R-KER II Hybrid Resin for Low Temperature (Winter) / Rapid Cure Styrene Free Hybrid Resin	300
R-KER-II-400-W			400
R-KER-II-300-SV	R-KER-II	R-KER II Hybrid Resin	300

R-STUDS

Size	Product Code			Anchor		Fixture		
	Steel class 5.8	Steel class 8.8	Steel grade A4	Diameter d [mm]	Length L [mm]	Hole diameter d_f [mm]	Max. thickness t_{fix} for: $h_{nom,min}$ [mm]	Max. thickness t_{fix} for: $h_{nom,12d}$ [mm]
M8	R-STUDS-08110	R-STUDS-08110-88	R-STUDS-08110-A4	8	110	9	40	4
	R-STUDS-08160	-	R-STUDS-08160-A4	8	160	9	90	54
M10	R-STUDS-10130	R-STUDS-10130-88	R-STUDS-10130-A4	10	130	12	58	-
	R-STUDS-10170	-	-	10	170	12	98	38
	R-STUDS-10190	-	-	10	190	12	118	58
M12	R-STUDS-12160	R-STUDS-12160-88	R-STUDS-12160-A4	12	160	14	85	1
	R-STUDS-12190	-	R-STUDS-12190-A4	12	190	14	115	31
	R-STUDS-12220	-	-	12	220	14	-	-
	R-STUDS-12260	-	-	12	260	14	185	101
	R-STUDS-12300	R-STUDS-12300-88	R-STUDS-12300-A4	12	300	14	225	141
M16	R-STUDS-16190	R-STUDS-16190-88	R-STUDS-16190-A4	16	190	18	111	-
	R-STUDS-16220	R-STUDS-16220-88	-	16	220	18	141	9
	R-STUDS-16260	-	-	16	260	18	181	49
	R-STUDS-16300	-	-	16	300	18	221	89
	R-STUDS-16380	-	-	16	380	18	301	169
M20	R-STUDS-20260	R-STUDS-20260-88	R-STUDS-20260-A4	20	260	22	157	-
	R-STUDS-20300	R-STUDS-20300-88	-	20	300	22	197	37
	R-STUDS-20350	-	-	20	350	22	247	87
	-	R-STUDS-20220-88	-	20	220	22	117	-
M24	R-STUDS-24300	R-STUDS-24300-88	R-STUDS-24300-A4	24	300	26	176	-
M30	R-STUDS-30380	R-STUDS-30380-88	-	30	380	32	226	-

Installation data

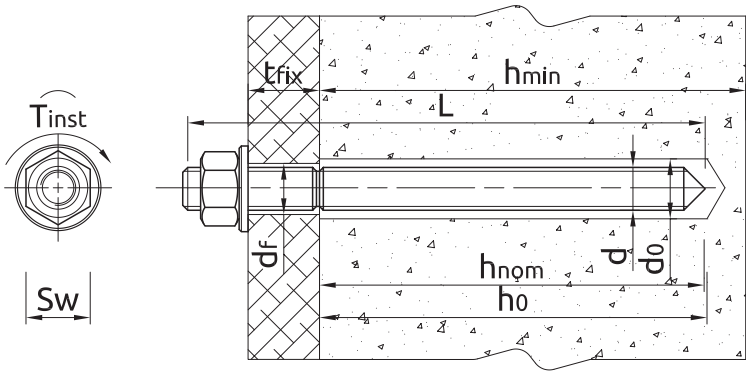

R-STUDS

Size			M8	M10	M12	M16	M20	M24	M30
Thread diameter	d	[mm]	8	10	12	16	20	24	30
Hole diameter in substrate	d_0	[mm]	10	12	14	18	24	28	35
Hole diameter in fixture	d_f	[mm]	9	12	14	18	22	26	33
Min. hole depth in substrate	h_0	[mm]	$h_{nom} + 5$	$h_{nom} + 5$	$h_{nom} + 5$	$h_{nom} + 5$	$h_{nom} + 5$	$h_{nom} + 5$	$h_{nom} + 5$
Min. substrate thickness	h_{min}	[mm]	$h_{nom} + 30 \geq 100$	$h_{nom} + 30 \geq 100$	$h_{nom} + 30 \geq 100$	$h_{nom} + 2d_0$	$h_{nom} + 2d_0$	$h_{nom} + 2d_0$	$h_{nom} + 2d_0$
Installation torque	T_{inst}	[Nm]	10	20	40	80	120	160	200
Min. spacing	s_{min}	[mm]	40	40	40	40	40	50	60
Min. edge distance	c_{min}	[mm]	40	40	40	40	40	50	60
MINIMUM EMBEDMENT DEPTH									
Min. installation depth	$h_{nom,min}$	[mm]	60	60	60	60	80	96	120
MAXIMUM EMBEDMENT DEPTH									
Min. installation depth	$h_{nom, max}$	[mm]	160	200	240	320	400	480	600

Minimum working and curing time

R-KER-II

Resin temperature	Concrete temperature	Curing time*	Working time
[°C]	[°C]	[min]	[min]
5	-5	24 h	40
5	0	3 h	30
5	5	90	15
10	10	60	8
15	15	60	5
20	20	45	2.5
25	25	45	2
25	30	45	2
25	35	30	1.5
25	40	30	1.5

**For wet concrete the curing time must be doubled*

Installation data

R-KER-II S

Resin temperature	Concrete temperature	Curing time*	Working time
[°C]	[°C]	[min]	[min]
5	5	12 h	40
10	10	8 h	20
15	15	6 h	15
20	20	4 h	10
25	25	3 h	9.5
25	30	2 h	7
25	35	2 h	6.5
25	40	1.5 h	6.5

**For wet concrete the curing time must be doubled*

R-KER-II W

Resin temperature	Concrete temperature	Curing time*	Working time
[°C]	[°C]	[min]	[min]
5	-20	24 h	80
5	-15	16 h	60
5	-10	8 h	40
5	-5	4 h	20
5	0	2 h	14
5	5	60	9
10	10	45	5.5
15	15	30	3
20	20	15	2
25	25	10	1.5
25	30	10	1.5
25	35	5	1
25	40	5	1

**For wet concrete the curing time must be doubled*

Mechanical properties

Size			M8	M10	M12	M16	M20	M24	M30
R-STUDS Metric Threaded Rods - Steel Class 5.8									
Nominal ultimate tensile strength - tension	f_{uk}	[N/mm²]	500	500	500	500	500	500	500
Nominal yield strength - tension	f_{yk}	[N/mm²]	400	400	400	400	400	400	400
Cross sectional area - tension	A_s	[mm²]	37	58	84	157	245	353	560
Elastic section modulus	W_{el}	[mm³]	31	62	109	278	541	935	1868
Characteristic bending resistance	$M^0_{Rk,s}$	[Nm]	19	37	65	166	324	561	1124
Design bending resistance	M	[Nm]	15	30	52	133	259	449	899
Allowable bending resistance	M_{rec}	[Nm]	11	21	37	95	185	321	642
R-STUDS Metric Threaded Rods - Steel Class 8.8									
Nominal ultimate tensile strength - tension	f_{uk}	[N/mm²]	800	800	800	800	800	800	800
Nominal yield strength - tension	f_{yk}	[N/mm²]	640	640	640	640	640	640	640
Cross sectional area - tension	A_s	[mm²]	37	58	84	157	245	353	560
Elastic section modulus	W_{el}	[mm³]	31	62	109	278	541	935	1868
Characteristic bending resistance	$M^0_{Rk,s}$	[Nm]	30	60	105	266	519	898	1799
Design bending resistance	M	[Nm]	24	48	84	213	416	718	1439
Allowable bending resistance	M_{rec}	[Nm]	17	34	60	152	297	513	1028

Mechanical properties

Size			M8	M10	M12	M16	M20	M24	M30
R-STUDS Metric Threaded Rods - Steel Class A4									
Nominal ultimate tensile strength - tension	f_{uk}	[N/mm²]	700	700	700	700	700	700	700
Nominal yield strength - tension	f_{yk}	[N/mm²]	450	450	450	450	450	450	450
Cross sectional area - tension	A_s	[mm²]	37	58	84	157	245	353	560
Elastic section modulus	W_{el}	[mm³]	31	62	109	278	541	935	1868
Characteristic bending resistance	$M^0_{Rk,s}$	[Nm]	26	52	92	233	454	786	1574
Design bending resistance	M	[Nm]	17	34	59	149	291	504	1009
Allowable bending resistance	M_{rec}	[Nm]	12	24	42	107	208	360	721

Basic performance data

R-STUDS

Performance data for single anchor without influence of edge distance and spacing

Size		M8	M10	M12	M16	M20	M24	M30	M8	M10	M12	M16	M20	M24	M30
Substrate		Non-cracked concrete							Cracked concrete						
MEAN ULTIMATE LOAD															
TENSION LOAD $N_{Ru,m}$															
R-STUDS METRIC THREADED RODS - STEEL CLASS 5.8															
Minimum embedment depth	[kN]	22.0	28.2	28.2	28.2	43.4	57.0	79.7	20.1	20.1	20.1	20.1	30.9	40.6	56.8
Maximum embedment depth	[kN]	22.0	34.8	50.6	94.2	147.0	211.7	335.9	22.0	34.8	50.6	94.2	147.0	211.7	335.9
R-STUDS METRIC THREADED RODS - STEEL CLASS 8.8															
Minimum embedment depth	[kN]	28.2	28.2	28.2	28.2	43.4	57.0	79.7	20.1	20.1	20.1	20.1	30.9	40.6	56.8
Maximum embedment depth	[kN]	32.9	52.2	75.9	141.3	220.5	317.5	503.8	32.9	52.2	75.9	141.3	220.5	317.5	503.8
R-STUDS METRIC THREADED RODS - STEEL CLASS A4															
Minimum embedment depth	[kN]	28.2	28.2	28.2	28.2	43.4	57.0	79.7	20.1	20.1	20.1	20.1	30.9	40.6	56.8
Maximum embedment depth	[kN]	28.9	45.8	66.6	124.0	193.6	278.7	442.2	28.9	45.8	66.6	124.0	193.6	278.7	442.2
SHEAR LOAD $V_{Ru,m}$															
R-STUDS METRIC THREADED RODS - STEEL CLASS 5.8															
Minimum embedment depth	[kN]	11.0	17.4	25.3	47.1	73.5	105.8	167.9	11.0	17.4	25.3	47.1	73.5	105.8	135.7
Maximum embedment depth	[kN]	11.0	17.4	25.3	47.1	73.5	105.8	167.9	11.0	17.4	25.3	47.1	73.5	105.8	167.9
R-STUDS METRIC THREADED RODS - STEEL CLASS 8.8															
Minimum embedment depth	[kN]	16.5	26.1	37.9	70.7	110.3	158.8	194.3	16.5	26.1	37.9	64.3	84.8	114.1	115.0
Maximum embedment depth	[kN]	16.5	26.1	37.9	70.7	110.3	158.8	240.4	16.5	26.1	37.9	70.7	110.3	158.8	226.9
R-STUDS METRIC THREADED RODS - STEEL CLASS A4															
Minimum embedment depth	[kN]	14.5	22.9	33.3	62.0	96.8	139.4	221.1	14.5	22.9	33.3	62.0	85.3	114.3	170.7
Maximum embedment depth	[kN]	14.5	22.9	33.3	62.0	96.8	139.4	221.1	14.5	22.9	33.3	62.0	96.8	139.4	221.1

Basic performance data

Size		M8	M10	M12	M16	M20	M24	M30	M8	M10	M12	M16	M20	M24	M30
CHARACTERISTIC LOAD															
TENSION LOAD N_{Rk}															
R-STUDS METRIC THREADED RODS - STEEL CLASS 5.8															
Minimum embedment depth	[kN]	18.0	22.9	22.9	22.9	35.2	46.3	64.7	15.1	16.0	16.0	16.0	24.6	32.4	45.3
Maximum embedment depth	[kN]	18.0	29.0	42.0	78.0	122.0	176.0	280.0	18.0	29.0	42.0	78.0	122.0	176.0	280.0
R-STUDS METRIC THREADED RODS - STEEL CLASS 8.8															
Minimum embedment depth	[kN]	22.9	22.9	22.9	22.9	35.2	46.3	64.7	15.1	16.0	16.0	16.0	24.6	32.4	45.3
Maximum embedment depth	[kN]	29.0	46.0	67.0	126.0	196.0	282.0	448.0	29.0	46.0	67.0	126.0	188.5	253.3	282.7
R-STUDS METRIC THREADED RODS - STEEL CLASS A4															
Minimum embedment depth	[kN]	22.9	22.9	22.9	22.9	35.2	46.3	64.7	15.1	16.0	16.0	16.0	24.6	32.4	45.3
Maximum embedment depth	[kN]	26.0	41.0	59.0	110.0	171.0	247.0	392.0	26.0	41.0	59.0	110.0	171.0	247.0	282.7
SHEAR LOAD V_{Rk}															
R-STUDS METRIC THREADED RODS - STEEL CLASS 5.8															
Minimum embedment depth	[kN]	9.00	14.0	21.0	39.0	61.0	88.0	129.3	9.00	14.0	21.0	32.0	49.3	64.8	90.5
Maximum embedment depth	[kN]	9.00	14.0	21.0	39.0	61.0	88.0	140.0	9.00	14.0	21.0	39.0	61.0	88.0	140.0
R-STUDS METRIC THREADED RODS - STEEL CLASS 8.8															
Minimum embedment depth	[kN]	15.0	23.0	34.0	45.7	70.4	92.5	129.3	15.0	23.0	32.0	32.0	49.3	64.8	90.5
Maximum embedment depth	[kN]	15.0	23.0	34.0	63.0	98.0	141.0	224.0	15.0	23.0	34.0	63.0	98.0	141.0	224.0
R-STUDS METRIC THREADED RODS - STEEL CLASS A4															
Minimum embedment depth	[kN]	13.0	20.0	29.0	45.7	70.4	92.5	129.3	13.0	20.0	29.0	32.0	49.3	64.8	90.5
Maximum embedment depth	[kN]	13.0	20.0	29.0	55.0	86.0	124.0	196.0	13.0	20.0	29.0	55.0	86.0	124.0	196.0
DESIGN LOAD															
TENSION LOAD N_{Rd}															
R-STUDS METRIC THREADED RODS - STEEL CLASS 5.8															
Minimum embedment depth	[kN]	12.0	15.2	15.2	15.2	23.5	30.9	43.1	10.1	10.7	10.7	10.7	16.4	21.6	30.2
Maximum embedment depth	[kN]	12.0	19.3	28.0	52.0	81.3	117.3	186.7	12.0	19.3	28.0	52.0	81.3	117.3	186.7
R-STUDS METRIC THREADED RODS - STEEL CLASS 8.8															
Minimum embedment depth	[kN]	15.2	15.2	15.2	15.2	23.5	30.9	43.1	10.1	10.7	10.7	10.7	16.4	21.6	30.2
Maximum embedment depth	[kN]	19.3	30.7	44.7	84.0	130.7	188.0	298.7	19.3	30.7	44.7	84.0	125.7	168.9	188.5
R-STUDS METRIC THREADED RODS - STEEL CLASS A4															
Minimum embedment depth	[kN]	13.9	15.2	15.2	15.2	23.5	30.9	43.1	10.1	10.7	10.7	10.7	16.4	21.6	30.2
Maximum embedment depth	[kN]	13.9	21.9	31.6	58.8	91.4	132.1	209.6	13.9	21.9	31.6	58.8	91.4	132.1	188.5
SHEAR LOAD V_{Rd}															
R-STUDS METRIC THREADED RODS - STEEL CLASS 5.8															
Minimum embedment depth	[kN]	7.20	11.2	16.8	30.5	46.9	61.7	86.2	7.20	11.2	16.8	21.3	32.9	43.2	60.4
Maximum embedment depth	[kN]	7.20	11.2	16.8	31.2	48.8	70.4	112.0	7.20	11.2	16.8	31.2	48.8	70.4	112.0
R-STUDS METRIC THREADED RODS - STEEL CLASS 8.8															
Minimum embedment depth	[kN]	12.0	18.4	27.2	30.5	46.9	61.7	86.2	12.0	18.4	21.3	21.3	32.9	43.2	60.4
Maximum embedment depth	[kN]	12.0	18.4	27.2	50.4	78.4	112.8	179.2	12.0	18.4	27.2	50.4	78.4	112.8	179.2
R-STUDS METRIC THREADED RODS - STEEL CLASS A4															
Minimum embedment depth	[kN]	8.33	12.8	18.6	30.5	46.9	61.7	86.2	8.33	12.8	18.6	21.3	32.9	43.2	60.4
Maximum embedment depth	[kN]	8.33	12.8	18.6	35.3	55.1	79.5	125.6	8.33	12.8	18.6	35.3	55.1	79.5	125.6

Basic performance data

Size		M8	M10	M12	M16	M20	M24	M30	M8	M10	M12	M16	M20	M24	M30
RECOMMENDED LOAD															
TENSION LOAD N_{rec}															
R-STUDS METRIC THREADED RODS - STEEL CLASS 5.8															
Minimum embedment depth	[kN]	8.57	10.9	10.9	10.9	16.8	22.0	30.8	7.18	7.62	7.62	7.62	11.7	15.4	21.6
Maximum embedment depth	[kN]	8.57	13.8	20.0	37.1	58.1	83.8	133.3	8.57	13.8	20.0	37.1	58.1	83.8	133.3
R-STUDS METRIC THREADED RODS - STEEL CLASS 8.8															
Minimum embedment depth	[kN]	10.9	10.9	10.9	10.9	16.8	22.0	30.8	7.18	7.62	7.62	7.62	11.7	15.4	21.6
Maximum embedment depth	[kN]	13.8	21.9	31.9	60.0	93.3	134.3	213.3	13.8	21.9	31.9	60.0	89.8	120.6	134.6
R-STUDS METRIC THREADED RODS - STEEL CLASS A4															
Minimum embedment depth	[kN]	9.93	10.9	10.9	10.9	16.8	22.0	30.8	7.18	7.62	7.62	7.62	11.7	15.4	21.6
Maximum embedment depth	[kN]	9.93	15.7	22.5	42.0	65.3	94.4	149.7	9.93	15.7	22.5	42.0	65.3	94.4	134.6
SHEAR LOAD V_{rec}															
R-STUDS METRIC THREADED RODS - STEEL CLASS 5.8															
Minimum embedment depth	[kN]	5.14	8.00	12.0	21.8	33.5	44.1	61.6	5.14	8.00	12.0	15.2	23.5	30.9	43.1
Maximum embedment depth	[kN]	5.14	8.00	12.0	22.3	34.9	50.3	80.0	5.14	8.00	12.0	22.3	34.9	50.3	80.0
R-STUDS METRIC THREADED RODS - STEEL CLASS 8.8															
Minimum embedment depth	[kN]	8.57	13.1	19.4	21.8	33.5	44.1	61.6	8.57	13.1	15.2	15.2	23.5	30.9	43.1
Maximum embedment depth	[kN]	8.57	13.1	19.4	36.0	56.0	80.6	128.0	8.57	13.1	19.4	36.0	56.0	80.6	128.0
R-STUDS METRIC THREADED RODS - STEEL CLASS A4															
Minimum embedment depth	[kN]	5.95	9.16	13.3	21.8	33.5	44.1	61.6	5.95	9.16	13.3	15.2	23.5	30.9	43.1
Maximum embedment depth	[kN]	5.95	9.16	13.3	25.2	39.4	56.8	89.7	5.95	9.16	13.3	25.2	39.4	56.8	89.7

Design performance data

R-STUDS

Size			M8	M10	M12	M16	M20	M24	M30
TENSION LOAD									
STEEL FAILURE; STEEL CLASS 5.8									
Characteristic resistance	$N_{Rk,s}$	[kN]	18.00	29.00	42.00	78.00	122.00	176.00	280.00
Partial safety factor	γ_{Ms}	-	1.50	1.50	1.50	1.50	1.50	1.50	1.50
STEEL FAILURE; STEEL CLASS 8.8									
Characteristic resistance	$N_{Rk,s}$	[kN]	29.00	46.00	67.00	126.00	196.00	282.00	448.00
Partial safety factor	γ_{Ms}	-	1.50	1.50	1.50	1.50	1.50	1.50	1.50
STEEL FAILURE; STEEL GRADE A4-70									
Characteristic resistance	$N_{Rk,s}$	[kN]	26.00	41.00	59.00	110.00	171.00	247.00	392.00
Partial safety factor	γ_{Ms}	-	1.87	1.87	1.87	1.87	1.87	1.87	1.87
COMBINED PULL-OUT AND CONCRETE CONE FAILURE; NON-CRACKED CONCRETE, C20/25 (40°C/24°C)									
Characteristic bond resistance	T_{Rk}	[N/mm²]	16.00	15.00	15.00	13.00	10.00	10.00	8.00
Sustained load factor	ψ^0_{sus}	-	0.72	0.72	0.72	0.72	0.72	0.72	0.72
COMBINED PULL-OUT AND CONCRETE CONE FAILURE; NON-CRACKED CONCRETE, C20/25 (80°C/50°C)									
Characteristic bond resistance	T_{Rk}	[N/mm²]	16.00	15.00	15.00	13.00	10.00	10.00	8.00
Sustained load factor	ψ^0_{sus}	-	0.72	0.72	0.72	0.72	0.72	0.72	0.72
COMBINED PULL-OUT AND CONCRETE CONE FAILURE; NON-CRACKED CONCRETE, C20/25 (120°C/80°C)									
Characteristic bond resistance	T_{Rk}	[N/mm²]	8.50	8.00	8.00	7.00	5.50	5.50	4.50
Sustained load factor	ψ^0_{sus}	-	0.61	0.61	0.61	0.61	0.61	0.61	0.61
COMBINED PULL-OUT AND CONCRETE CONE FAILURE; CRACKED CONCRETE, C20/25 (40°C/24°C)									
Characteristic bond resistance	T_{Rk}	[N/mm²]	10.00	11.00	11.00	9.50	7.50	7.00	5.00
Sustained load factor	ψ^0_{sus}	-	0.72	0.72	0.72	0.72	0.72	0.72	0.72
COMBINED PULL-OUT AND CONCRETE CONE FAILURE; CRACKED CONCRETE, C20/25 (80°C/50°C)									
Characteristic bond resistance	T_{Rk}	[N/mm²]	10.00	11.00	11.00	9.50	7.50	7.00	5.00
Sustained load factor	ψ^0_{sus}	-	0.72	0.72	0.72	0.72	0.72	0.72	0.72
COMBINED PULL-OUT AND CONCRETE CONE FAILURE; CRACKED CONCRETE, C20/25 (120°C/80°C)									
Characteristic bond resistance	T_{Rk}	[N/mm²]	5.00	6.00	6.00	5.00	4.00	4.00	3.00
Sustained load factor	ψ^0_{sus}	-	0.61	0.61	0.61	0.61	0.61	0.61	0.61
COMBINED PULL-OUT AND CONCRETE CONE FAILURE									
Installation safety factor	γ_{inst}	-	1.00	1.00	1.00	1.00	1.00	1.00	1.00
Increasing factors for $N_{Rd,p}$ - C30/37	ψ_c	-	1.05	1.04	1.04	1.04	1.04	1.04	1.04
Increasing factors for $N_{Rd,p}$ - C40/50	ψ_c	-	1.07	1.07	1.07	1.07	1.07	1.07	1.07
Increasing factors for $N_{Rd,p}$ - C50/60	ψ_c	-	1.09	1.09	1.09	1.09	1.09	1.09	1.09
CONCRETE CONE FAILURE									
Installation safety factor	γ_{inst}	-	1.00	1.00	1.00	1.00	1.00	1.00	1.00
Factor for cracked concrete	$k_{cr,N}$	-	7.70	7.70	7.70	7.70	7.70	7.70	7.70
Factor for non-cracked concrete	$k_{ucr,N}$	-	11.00	11.00	11.00	11.00	11.00	11.00	11.00
Edge distance	$c_{cr,N}$	[mm]	$1.5*h_{ef}$	$1.5*h_{ef}$	$1.5*h_{ef}$	$1.5*h_{ef}$	$1.5*h_{ef}$	$1.5*h_{ef}$	$1.5*h_{ef}$
Spacing	$s_{cr,N}$	[mm]	$3.0*h_{ef}$	$3.0*h_{ef}$	$3.0*h_{ef}$	$3.0*h_{ef}$	$3.0*h_{ef}$	$3.0*h_{ef}$	$3.0*h_{ef}$
CONCRETE SPLITTING FAILURE									
Installation safety factor	γ_{inst}	-	1.00	1.00	1.00	1.00	1.00	1.00	1.00

Design performance data

Size			M8	M10	M12	M16	M20	M24	M30
SHEAR LOAD									
STEEL FAILURE; STEEL CLASS 5.8									
Characteristic resistance without lever arm	$V_{Rk,s}$	[kN]	9.00	14.00	21.00	39.00	61.00	88.00	140.00
Ductility factor	k_7	-	0.80	0.80	0.80	0.80	0.80	0.80	0.80
Characteristic resistance with lever arm	$M_{Rk,s}$	[Nm]	19.00	37.00	65.00	166.00	324.00	561.00	1124.00
Partial safety factor	γ_{Ms}	-	1.25	1.25	1.25	1.25	1.25	1.25	1.25
STEEL FAILURE; STEEL CLASS 8.8									
Characteristic resistance without lever arm	$V_{Rk,s}$	[kN]	15.00	23.00	34.00	63.00	98.00	141.00	224.00
Ductility factor	k_7	-	0.80	0.80	0.80	0.80	0.80	0.80	0.80
Characteristic resistance with lever arm	$M_{Rk,s}$	[Nm]	30.00	60.00	105.00	266.00	519.00	898.00	1799.00
Partial safety factor	γ_{Ms}	-	1.25	1.25	1.25	1.25	1.25	1.25	1.25
STEEL FAILURE; STEEL GRADE A4-70									
Characteristic resistance without lever arm	$V_{Rk,s}$	[kN]	13.00	20.00	29.00	55.00	86.00	124.00	196.00
Ductility factor	k_7	-	0.80	0.80	0.80	0.80	0.80	0.80	0.80
Characteristic resistance with lever arm	$M_{Rk,s}$	[Nm]	26.00	52.00	92.00	233.00	454.00	786.00	1574.00
Partial safety factor	γ_{Ms}	-	1.56	1.56	1.56	1.56	1.56	1.56	1.56
CONCRETE PRY-OUT FAILURE									
Factor	k	-	2.00	2.00	2.00	2.00	2.00	2.00	2.00
Installation safety factor	γ_{inst}	-	1.00	1.00	1.00	1.00	1.00	1.00	1.00
CONCRETE EDGE FAILURE									
Anchor diameter	d_{nom}	[mm]	8.00	10.00	12.00	16.00	20.00	24.00	30.00
Effective length of anchor	ℓ_f	[mm]	min(300; h_{ef};12d_{nom})	min(300; h_{ef};12d_{nom})	min(300; h_{ef};12d_{nom})	min(300; h_{ef};12d_{nom})	min(300; h_{ef};12d_{nom})	min(300; h_{ef};12d_{nom})	min(300; h_{ef};12d_{nom})
Installation safety factor	γ_{inst}	-	1.00	1.00	1.00	1.00	1.00	1.00	1.00

Combined pull-out and concrete cone failure (EN 1992-4:2018, p.7.2.1.6., 7.14 - $N^0_{Rk,p}=\psi^0_{sus}*\tau_{Rk}*\pi*d*h_{ef}$).
$h_{ef} = h_{nom}$

Allowable values for resistance in case of Seismic performance category C1

Size			M8	M10	M12	M16	M20	M24	M30
TENSION LOAD									
STEEL FAILURE; STEEL CLASS 5.8									
Characteristic resistance	$N_{Rk,s}$	[kN]	18.00	29.00	42.00	78.00	122.00	176.00	280.00
Partial safety factor	$\gamma_{MsN,seisC1}$	-	1.50	1.50	1.50	1.50	1.50	1.50	1.50
STEEL FAILURE; STEEL CLASS 8.8									
Characteristic resistance	$N_{Rk,s}$	[kN]	29.00	46.00	67.00	126.00	196.00	282.00	448.00
Partial safety factor	$\gamma_{MsN,seisC1}$	-	1.50	1.50	1.50	1.50	1.50	1.50	1.50
STEEL FAILURE; STEEL GRADE A4-70									
Characteristic resistance	$N_{Rk,s}$	[kN]	26.00	41.00	59.00	110.00	171.00	247.00	392.00
Partial safety factor	$\gamma_{MsN,seisC1}$	-	1.87	1.87	1.87	1.87	1.87	1.87	1.87
COMBINED PULL-OUT AND CONCRETE CONE FAILURE; CRACKED CONCRETE, C20/25 (40°C/24°C)									
Characteristic bond resistance	T_{Rk}	[N/mm²]	8.00	10.00	10.00	9.50	7.50	7.00	4.00
COMBINED PULL-OUT AND CONCRETE CONE FAILURE; CRACKED CONCRETE, C20/25 (80°C/50°C)									
Characteristic bond resistance	T_{Rk}	[N/mm²]	8.00	10.00	10.00	9.50	7.50	7.00	4.00
COMBINED PULL-OUT AND CONCRETE CONE FAILURE; CRACKED CONCRETE, C20/25 (120°C/80°C)									
Characteristic bond resistance	T_{Rk}	[N/mm²]	4.50	5.00	6.00	5.00	4.00	4.00	2.00
COMBINED PULL-OUT AND CONCRETE CONE FAILURE									
Installation safety factor	γ_{inst}	-	1.00	1.00	1.00	1.00	1.00	1.00	1.00

Design performance data

Size			M8	M10	M12	M16	M20	M24	M30
SHEAR LOAD									
STEEL FAILURE; STEEL CLASS 5.8									
Characteristic resistance without lever arm	$V_{Rk,s}$	[kN]	6.30	10.10	14.70	27.30	42.70	61.60	98.00
Partial safety factor	$\gamma_{MsV,seisC1}$	-	1.25	1.25	1.25	1.25	1.25	1.25	1.25
STEEL FAILURE; STEEL CLASS 8.8									
Characteristic resistance without lever arm	$V_{Rk,s}$	[kN]	10.20	16.10	23.50	44.10	68.60	98.70	156.80
Partial safety factor	$\gamma_{MsV,seisC1}$	-	1.25	1.25	1.25	1.25	1.25	1.25	1.25
STEEL FAILURE; STEEL GRADE A4-70									
Characteristic resistance without lever arm	$V_{Rk,s}$	[kN]	9.10	14.40	20.70	38.50	59.90	86.50	137.40
Partial safety factor	$\gamma_{MsV,seisC1}$	-	1.56	1.56	1.56	1.56	1.56	1.56	1.56

Product commercial data

Product Code	Volume [ml]	Quantity [pcs]			Weight [kg]			Bar Codes
		Box	Outer	Pallet	Box	Outer	Pallet	
R-KER-II-300 [1]	300	10	10	840	5.9	5.9	525.6	5906675293738
R-KER-II-345 [1]	345	10	10	840	7.6	7.6	668.4	5906675395203
R-KER-II-400 [1]	400	10	10	560	8.4	8.4	498.9	5906675392103
R-KER-II-300-S [1]	300	10	10	840	5.9	5.9	525.6	5906675432045
R-KER-II-400-S [1]	400	10	10	560	8.2	8.2	489.2	5906675432076
R-KER-II-300-W [1]	300	10	10	840	5.9	5.9	525.6	5906675432038
R-KER-II-400-W [1]	400	10	10	560	8.2	8.2	489.2	5906675432069
R-KER-II-300-SV [1]	300	10	10	840	5.9	5.9	525.6	5906675439310

1) ETA-21/0242